Owner's Manual

GENERATOR

#106240

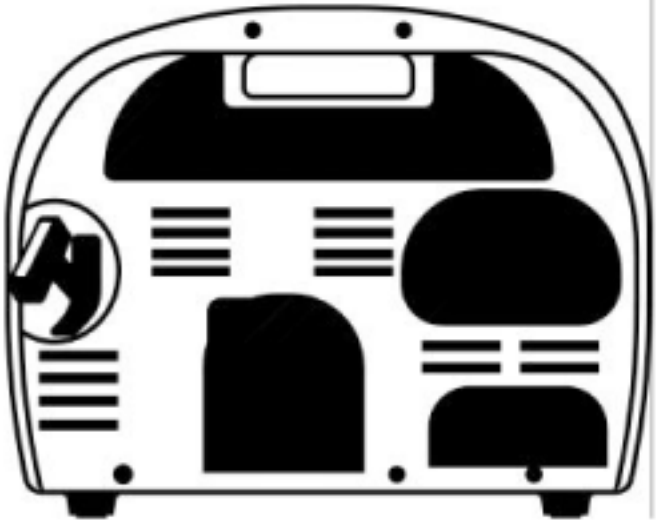

Read carefully and understand **RULES FOR SAFE OPERATION** and instructions before operating. Failure to follow the safety rules and other basic safety precautions may result in serious personal injury.

P/No. 15750131001

This is a generator with a low emmission engine which operates differently from previously built engines. Before starting this engine, read and understand this Owner's Manual.

Dear Customer:

Thank you for purchasing our generator. We want to help you get the best results from your new generator and to operate it safely. This manual contains the information on how to do that; please read it carefully before operating or performing any adjustments on your generator.

This owner's manual describes the operation and maintenance of our generator.

All information in this publication is based on the latest product information available at the time of printing. We reserve the right to make changes at any time without notice and without incurring any obligation.

No part of this publication may be reproduced without written permission.

This manual should be considered a permanent part of the generator and should remain with it if it is resold, loaned or rented.

Safety Messages

Your safety and the safety of others are very important. We have provided important safety messages in this manual and on the generator. Please read these messages carefully.

A safety message alerts you to potential hazards that could hurt you or others. Each safety message is preceded by a safety alert symbol ⚠ and one of three words; **DANGER**, **WARNING**, or **CAUTION**.

These words mean:

⚠DANGER Indicates an imminently hazardous situation which, if not avoided, will result in death or serious injury.

⚠ WARNING Indicates a potentially hazardous situation which, if not avoided, could result in death or serious injury.

⚠CAUTION Indicates a potentially hazardous situation which, if not avoided, may result in minor or moderate injury. It may also be used to alert against unsafe practices.

Each message tells you what the hazard is, what can happen, and what you can do to avoid or reduce injury.

Damage Prevention Messages

You will also see other important messages that are preceded by the word **NOTICE**.

This word means:

NOTICE Your generator or other property could be damaged if you don't follow instructions.

The purpose of these messages is to help prevent damage to your generator, other property, or the environment.

SAFETY

SAFETY LABEL LOCATION

These labels warn you of potential hazards that can cause serious injury. Read them carefully.

If a label comes off or becomes hard to read, please contact Customer Service at 1-800-222-5381 for a replacement label.

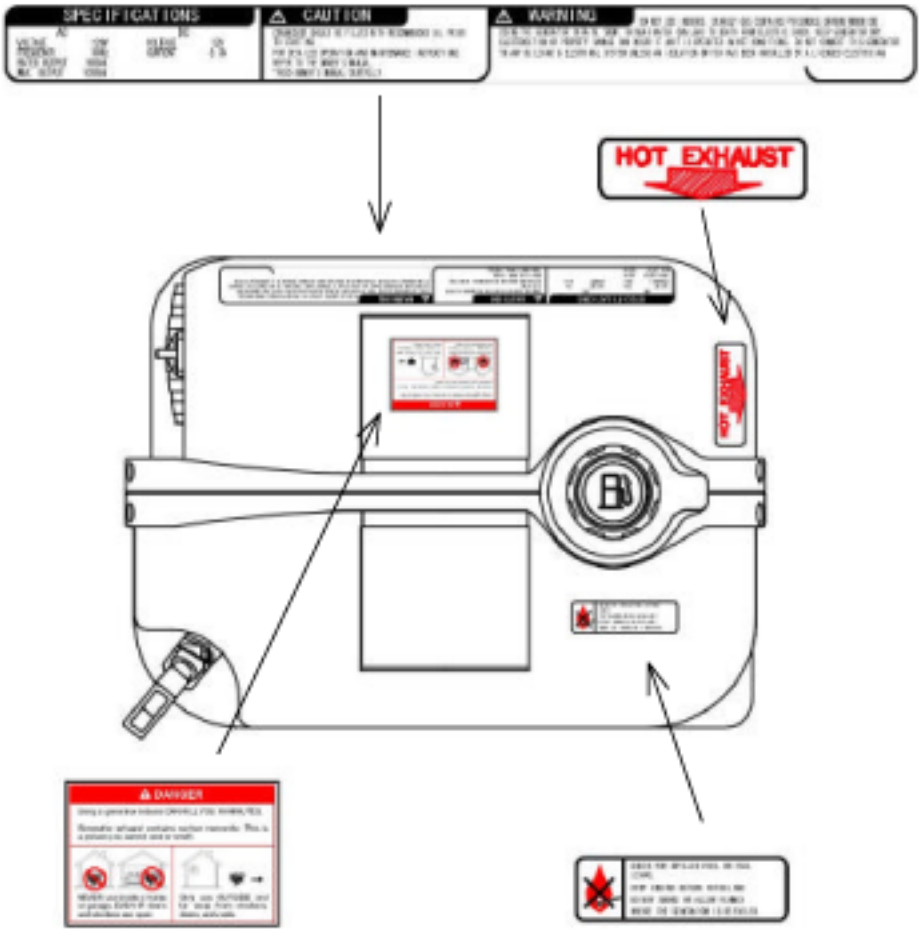

SAFETY PRECAUTION

Our generators are designed to give safe and dependable service if operated according to instructions. Please read and understand this owner's manual before operating your generator. You can help prevent accidents by being familiar with your generator's controls, and by observing safe operating procedures.

Operator Responsibility

1. Know how to stop the generator quickly in case of emergency.
2. Understand the use of all generator controls, output receptacles, and connections.
3. Be sure that anyone who operates the generator receives proper instruction and reads the instruction manual.
4. Do not let children operate the generator without parental supervision.
5. Do not unreasonably adjust the engine speed.

Carbon Monoxide Hazards

1. Exhaust contains poisonous carbon monoxide, a colorless and odorless gas. Breathing exhaust can cause loss of consciousness and may lead to death.
2. Never install your generator inside confined areas. Inside installation can cause health hazards or death. To keep exhaust gas from building up, provide adequate ventilation.

Electric Shock Hazards – Never operate generator under the following conditions:

1. The generator produces enough electric power to cause a serious shock or electrocution if misused.
2. Excessive change in engine speed, slow or fast; sparking or arcs from generator; loss of electrical output; damaged receptacles; engine misfire; excessive vibrations; enclosed compartments; flame or smoke; rain or snow or other wet conditions; operator non-attendance. Keep the generator dry.
3. If the generator is stored outdoors, unprotected from the weather, check all electrical components on the control panel before each use.
   Moisture or ice can cause a malfunction or short circuit in electrical components, which could result in electrocution.
4. Do not connect to a building's electrical system unless an isolation switch has been installed by a qualified electrician.

Fire and Burn Hazards

1. The exhaust system gets hot enough to ignite some materials.
   - Keep the generator at least 1 meter (3 feet) away from buildings and other equipment during operation.
   - Do not enclose the generator in any structure.
   - Keep flammable materials away from the generator.

2. The muffler and muffler cover becomes very hot during operation and remain hot for a while after stopping the engine. Be careful not to touch the muffler and muffler cover while they are hot. Let the engine cool before storing the generator indoors.

3. Gasoline is extremely flammable and is explosive under certain conditions. Do not smoke or allow flames or sparks where the generator is refueled or where gasoline is stored. Refuel in a well-ventilated area with the engine stopped.

4. Fuel vapors are extremely flammable and may ignite after the engine has started. Make sure that any spilled fuel has been wiped up before starting the generator.

⚠ WARNING Keep a fire extinguisher close by your generator and be familiar on how to use it. Consult your local fire department for the correct fire extinguisher type.

⚠ WARNING Check fuel system on a regular basis. Look for signs of leaks, deterioration, chafed or spongy fuel hose, loose or missing fuel hose clamps, damaged fuel tank or a defective fuel shutoff valve. Correct any defects before operating.

NAME OF PARTS

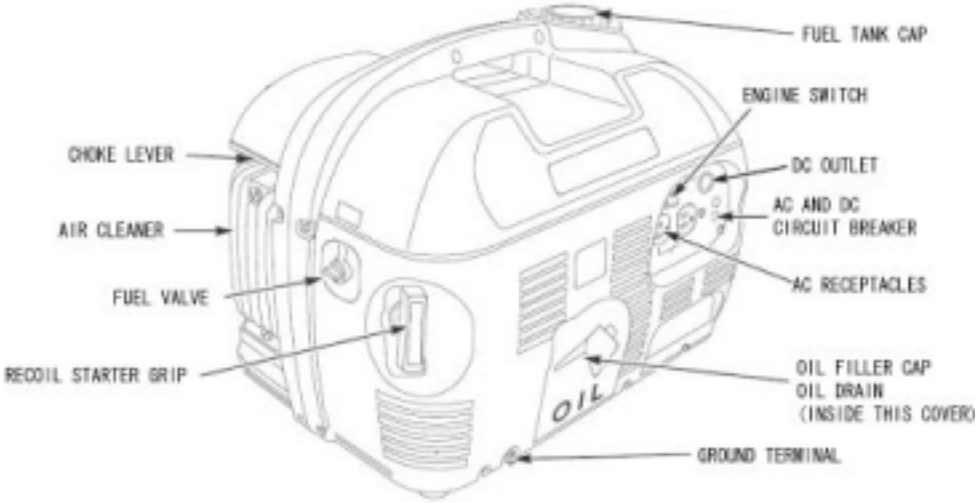

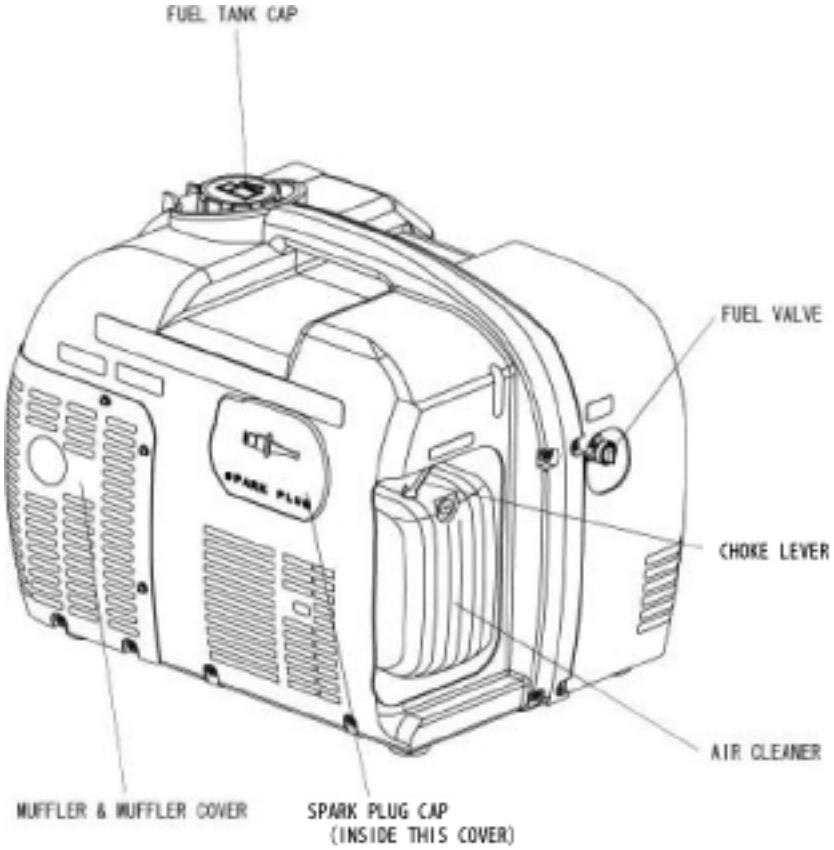
FUEL TANK CAP
FUEL VALVE
CHOKE LEVER
AIR CLEANER
MUFFLER & MUFFLER COVER
SPARK PLUG CAP
(INSIDE THIS COVER)

HOW TO HANDLE PARTS

Engine Switch

Switch position

OFF: To stop the engine.

ON : To run the engine.

Recoil Starter

To start the engine, pull the starter grip lightly until resistance is felt, then pull briskly.

NOTICE Do not allow the starter to snap back against the engine. Return it gently to prevent damage to the starter.

Fuel Valve

The fuel valve is located between the fuel tank and carburetor. When the valve lever is in the "OPEN" position, fuel is allowed to flow from the fuel tank to the carburetor. Be sure to return the lever to "CLOSE" position after stopping the engine.

Choke Lever

The choke is used to provide proper starting mixture when the engine is cold. It can be opened and closed by operating the choke lever manually. Turn the lever toward closed to enrich the mixture.

Circuit Breaker

The Circuit breaker will automatically cut off the circuit if there is a short circuit or a significant overload of the generator at the receptacle. If the circuit breaker is OFF automatically, check that the appliance is working properly and does not exceed the rated load capacity of the circuit before resetting the circuit breaker.

ON

OFF (PUSH TO RESET)

Ground Terminal

The generator ground terminal is connected to the frame of the generator, the metal non-current carrying parts of the generator, and the ground terminals of each receptacle. Before using the ground terminal, consult a qualified electrician, electrical inspector or local agency having jurisdiction for local codes or ordinances that apply to the intended use of the generator.

Oil Alert System

The Oil Alert system is designed to prevent engine damage caused by an insufficient amount of oil in the crankcase. Before the oil level in the crankcase can fall below a safe limit, the Oil Alert system will automatically shut down the engine (the engine switch will remain in the "ON" position).

If the Oil Alert system shuts down the engine, add engine oil.

DC Outlet

The DC outlet is used only for charging a 12 Volt battery. It provides up to 12V-8.3A (100W) of power.

HOW TO HANDLE GENERATOR

Connections to a Building's Electrical System

Connections for standby power to a building's electrical system must be made by a qualified electrician. The connection must isolate the generator power from utility power, and must comply with all applicable laws and electrical codes.

⚠ WARNING Improper connections to a building's electrical system can allow electrical current from the generator to backfeed into the utility lines. Such backfeed may electrocute utility company workers or others who contact the lines during a power outage. Consult the utility company or a qualified electrician.

⚠ CAUTION Improper connections to a building's electrical system can allow electrical current from the utility company to backfeed into the generator. When utility power is restored, the generator may explode, burn, or cause fires in the building's electrical system.

Ground System

The generator has a system ground that connects generator frame components to the ground terminals in the AC output receptacles. The system ground is not connected to the AC neutral wire. If the generator is tested by a receptacle tester, it will not show the same ground circuit condition as for a home receptacle.

AC Applications

Before connecting an appliance or power cord to the generator:

1. Make sure that it is in good working order. Faulty appliances or power cords can create a potential for electrical shock. Always use electrical cords that are in good condition. Worn, bare, frayed or otherwise damaged cords can cause electrical shock.
2. If an appliance begins to operate abnormally, becomes sluggish or stops suddenly, turn off immediately. Disconnect the appliance, and determine whether the problem is the appliance, or if the rated load capacity of the generator has been exceeded. It is important to determine the total electrical load before it is connected to the generator. If the generator is overloaded, the wires will become hot and cause the insulation to break down, reducing its ability to resist corrosive contaminants.
3. Make sure that the electrical rating of the tool or appliance does not exceed that of the continuous power of the generator.

AC Operation

①Start the engine.

②Plug in the appliance.

NOTICE **Do not exceed the current limit specified for any one receptacle.**

An overloaded circuit could cause the receptacle to burn out.

Most motorized appliances require more than their rated wattage for startup.

Should the generator become overloaded, the circuit breaker will cut off power. When this occurs, reduce the electrical load on the circuit, then push the reset button to reset the circuit.

Battery Charge

The generator has DC outlet for charging a 12 Volt battery. It provides up to 12V-8.3A (100W) of power.

⚠CAUTION Be sure to make the correct connection to the battery. Connect the red battery cable to the battery's positive post, the black cable to the negative post.

Should the generator become overloaded, the circuit breaker will cut off power. When this occurs, reduce the electrical load on the circuit, then push the reset button to reset the circuit.

⚠CAUTION Do not use AC and DC power at the same time.

High Altitude Operation

At high altitudes, the standard carburetor air-fuel mixture will be excessively rich.

Performance will decrease, and fuel consumption will increase.

Engine horsepower will decrease approximately 3.5% for each 1,000 feet increase in altitude.

PRE-OPERATION CHECK

Engine oil

NOTICE Engine oil is a major factor affecting engine performance and service life. Nondetergent and 2-stroke engine oils will damage the engine and are not recommended.

Check the oil level BEFORE EACH USE with the generator on a level surface with the engine stopped.

Use 4-stroke oil, or an equivalent high-detergent, premium-quality motor oil certified to meet or exceed U.S. automobile manufacture's requirements for Service Classification SG, SF/CC, CD. Motor oils classified SG, SF/CC, CD will show this designation on the container.

SAE 10W-30 is recommended for general, all-temperature use. Other viscosities shown in the chart may be used when the average temperature in your area is within the indicated range.

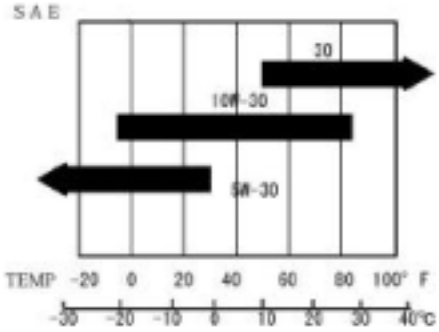

①Remove the oil filler cap and wipe the dipstick clean.

②Check the oil level by inserting the dipstick into the filler neck without screwing it in.

③If the level is low, fill to the top of the oil filler neck with the recommended oil.

Fuel Recommendation

①Remove the fuel cap.

②Check the fuel level.

③Refill the tank if the fuel level is low. Do not fill above the shoulder of the fuel strainer.

⚠ WARNING

1. Gasoline is extremely flammable and is explosive under certain conditions.
2. Refuel in a well-ventilated area with the engine stopped. Do not smoke or allow flames or sparks in the area where the engine is refueled or where gasoline is stored.
3. Do not overfill the fuel tank (there should be no fuel in the filler neck).
   After refueling, make sure the tank cap is closed properly and securely. Be careful not to spill fuel when refueling. Spilled fuel or fuel vapor may ignite. If any fuel is spilled, make sure the area is dry before starting the engine.
4. Avoid repeated or prolonged contact with skin or breathing of vapor.
5. KEEP OUT OF REACH OF CHILDREN.

Use gasoline with a pump octane rating of 86 or higher.
We recommend unleaded gasoline because it produces fewer engine and spark plug deposits and extends exhaust system life.
Never use stale or contaminated gasoline or oil/gasoline mixture. Avoid getting dirt or water in the fuel tank.

Occasionally you may hear light "spark knock" or "pinging" (metallic rapping noise) while operating under heavy loads. This is no cause for concern.
If spark knock or pinging occurs at a steady engine speed, under normal load, change brands of gasoline. If spark knock or pinging persists, see an authorized service technician.

NOTICE Running the engine with persistent spark knock or pinging can cause engine damage.
Running the engine with persistent spark knock or pinging is misuse, and the Distributor's **Limited Warranty does not cover parts damaged by misuse.**

Oxygenated Fuels

Some gasolines are being blended with alcohol or an ether compound to increase the octane. These gasolines are collectively referred to as oxygenated fuels. Some areas use oxygenated fuels to help meet clean air standards.

If you use an oxygenated fuel, be sure its pump octane rating is 86 or higher.

Ethanol (ethyl or grain alcohol)

Gasoline containing more than 10% ethanol by volume may cause starting and/or performance problems. Gasoline containing ethanol may be marketed under the name "Gasohol".

Methanol (methyl or wood alcohol)

Gasoline containing methanol must contain cosolvents and corrosion inhibitors to protect the fuel system. Gasoline containing more than 5% methanol by volume may cause starting and/or performance problems and may damage metal, rubber and plastic parts of your fuel system.

MTBE (methyl tertiary butyl ether)

You may use gasoline containing up to 15% MTBE by volume. Before using an oxygenatedfuel, try to confirm the fuel's contents. Some states (provinces in Canada) require this information to be posted on the pump. If you notice any undesirable operating symptoms, switch to a conventional unleaded gasoline. Fuel system damage or performance problems resulting from the use of an oxygenated fuel are not the responsibility of our company and are not covered under warranty.

Oxygenated fuels can damage paint and plastic. Be careful not to spill fuel when filling your fuel tank. **Damage caused by spilled fuel is not covered under warranty**.

STARTING THE ENGINE/STOPPING THE ENGINE

Starting the engine

①Turn the fuel valve to the "OPEN" position.

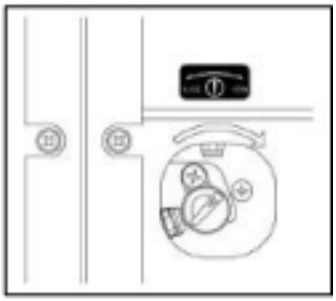

②Turn the choke lever to the "CLOSE" position.

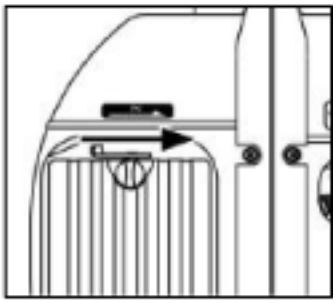

③Move the engine switch to the "ON" position.

④Pull the starter grip until compression is felt, then pull briskly.

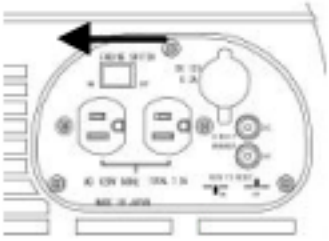

NOTICE Do not allow the starter grip to snap back. Return it slowly by hand.

⑤Turn the choke lever to the "OPEN" position as the engine warms up.

Stopping the Engine

In an emergency:

To stop the engine in an emergency, move the engine switch to the "OFF" position.

In normal use:

①Move the engine switch to the "OFF" position.

②Turn the fuel valve to the "CLOSE" position.

MAINTENANCE

Periodic maintenance and adjustment is necessary to keep the generator in good operating condition. Perform the service and inspection at the intervals shown in the Maintenance schedule below.

⚠ WARNING Exhaust gas contains poisonous carbon monoxide. Shut off the engine before performing any maintenance. If the engine must be run, make sure the area is well ventilated.

NOTICE Use only genuine MITSUBISHI parts or their equivalent for maintenance or repair. Replacement parts that are not of equivalent quality may damage the engine.

MAINTENANCE SCHEDULE

REGULAR SERVISE PERIOD Performed at every indicated month or operating hour interval, whichever comes first. ITEM		Each use	First month or 25Hrs. (3)	Every 3month or 50Hrs. (3)	Every 6month or 100Hrs. (3)
Engine oil	Check level	○			
	Change		○	○	
Air cleaner	Check	○			
	Clean			○ (1)	
Spark plug	Check-Clean			○	
Valve clearance	Check-Adjust				○ (2)
Fuel tank and strainer	Clean				○ (2)
Fuel line	Check (Replace if necessary)	Every 3 years (2)			

(1) Service more frequently when used in dusty areas.

(2) These items should be serviced by an authorized dealer or technician.

(3) For professional commercial use, log hours of operation to determine proper maintenance intervals.

Engine oil change

Drain the oil while the engine is warm to assure complete and rapid draining.

①Remove the drain plug and sealing washer, oil filler cap, and drain the oil.

②Install the drain plug and sealing washer. Tighten the plug securely.

③Refill with the recommended oil and check the level.

NOTE: Oil may be hot; use caution when draining oil from a warm engine.

Oil capacity: 0.4? (0.42 US qt, 0.35 Imp qt)

⚠CAUTION Used motor oil may cause skin cancer if repeatedly left in contact with the skin for prolonged periods. Although this is unlikely unless you handle used oil on a daily basis, it is still advisable to thoroughly wash your hands with soap and water as soon as possible after handling used oil.

Please dispose of used motor oil in a manner that is compatible with the environment. We suggest you take it in a sealed container to your local service station or recycling center for reclamation. Do not throw it the trash or pour it on the ground.

Air cleaner service

A dirty air cleaner will restrict airflow to the carburetor. To prevent carburetor malfunction, service the air cleaner regularly. Service more frequently when operating the generator in extremely dusty areas.

⚠ WARNING Using gasoline or flammable solvent to clean the filter element can cause a fire or explosion. Use only soapy water or nonflammable solvent.

NOTICE Never run the generator without the air cleaner. Rapid engine wear will result.

①Loosen the air cleaner cover screws, remove the air cleaner cover, and remove the element.

②Wash the element in a solution of household detergent and warm water, then rinse thoroughly; or wash in nonflammable or high flash point solvent. Allow the element to dry thoroughly.

③Soak the element in clean engine oil and squeeze out the excess oil. The engine will smoke during initial start-up it too much oil is left in the element.

④Reinstall the air cleaner element and the cover.

Spark Plug Service

Recommended spark plugs: BP6HS (NGK)

To ensure proper engine operation, the spark plug must be properly gapped and free of deposit.

If the engine has been running, the muffler will be very hot. Be careful not to touch the muffler.

①Remove the spark plug cap

②Clean any dirt from around the spark plug base.

③Remove the spark plug with spark plug socket.

④Visually inspect the spark plug. Discard it if the insulator is cracked or chipped. Clean the spark plug with a wire brush if it is to be reused.

⑤Measure the plug gap with a feeler gauge.
Correct as necessary by carefully bending the side electrode.
The gap should be: 0.7-0.8mm(0.028-0.031 in)

⑥Check that the spark plug washer is in good condition, and thread the spark plug in by hand to prevent cross threading.

⑦After the spark plug in seated, tighten with a spark plug wrench to compress the washer. If installing a new spark plug, tighten 1/2 turn after the spark plug seats to compress the washer. If reinstalling a used spark plug, tighten 1/8-1/4 turn after the spark plug seats to compress the washer.

NOTICE The spark plug must be securely tightened. An improperly tightened spark plug can become very hot and could damage the engine. Never use spark plug, which have an improper heat range. Use only the recommended spark plug or equivalent.

TRANSPORTING/STORAGE

When transporting the generator, turn the engine switch "OFF" and the fuel valve "CLOSE". Keep the generator level to prevent fuel spillage. Fuel vapor or spilled fuel may ignite.

⚠ WARNING Contact with a hot engine or exhaust system can cause serious burns or fires. Let the engine cool before transporting or storing the generator.

Take care not to drop or strike the generator when transporting. Do not place heavy objects on the generator.

Before storing the unit for an extended period:

1.Be sure the storage area is free of excessive humidity and dust.

2.Service according to the table below:

STORAGE TIME	RECOMMENDED SERVICE PROCEDURE TO PREVENT HARD STARTING
Less than 1 month	No preparation required
1 to 2 months	Fill with fresh gasoline and add gasoline conditioner.
2 months to 1 year	Drain the carburetor float bowl and fuel tank. Drain the Gasoline into a suitable container. After removal from storage, fill with fresh gasoline before starting.
1 year or more	Drain the carburetor float bowl and fuel tank. Drain the gasoline into a suitable container. Remove the spark plug. Put a tablespoon of engine oil into the cylinder. Turn the engine slowly with the pull rope to distribute the oil. Reinstall the spark plug. Change the engine oil. After removal from storage, fill with fresh gasoline before starting/

If the engine is not used for more 30 days. Changes in the fuel quality could cause poor engine starting, etc., so to prevent this loosen the fuel drain screw to drain out the fuel from carburetor. Also open the fuel valve to drain the fuel from the fuel tank.

3.Drain the carburetor by loosening the drain screw. Drain the gasoline into a suitable container.

⚠ WARNING Gasoline is extremely flammable and is explosive under certain conditions. Perform this task in a well ventilated area with the engine stopped.
Do not smoke or allow flames or sparks in the area during this procedure.

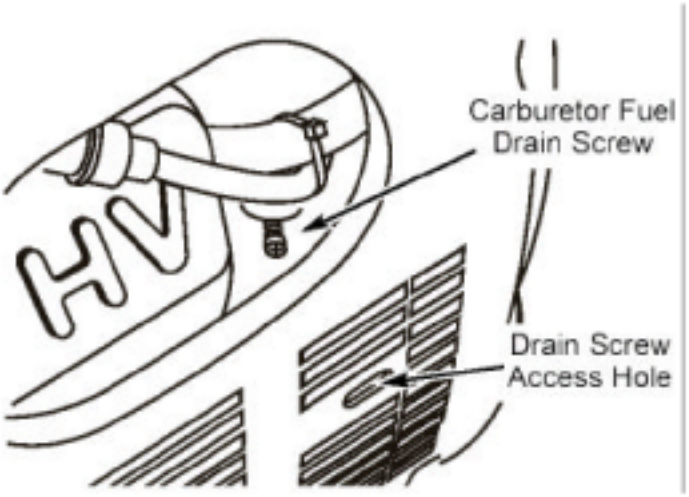

4.Change the engine oil.

5.Remove the spark plug, and pour about a tablespoon of clean engine oil into the cylinder. Crank the engine several revolutions to distribute the oil, then reinstall the spark plug.

6.Slowly pull the starter grip until resistance is felt. At this point, the piston is coming up on its compression stroke and both the intake and exhaust valves are closed. Storing the engine in this position will help to protect it from internal corrosion.

TROUBLE SHOOTING

When the engine will not start:

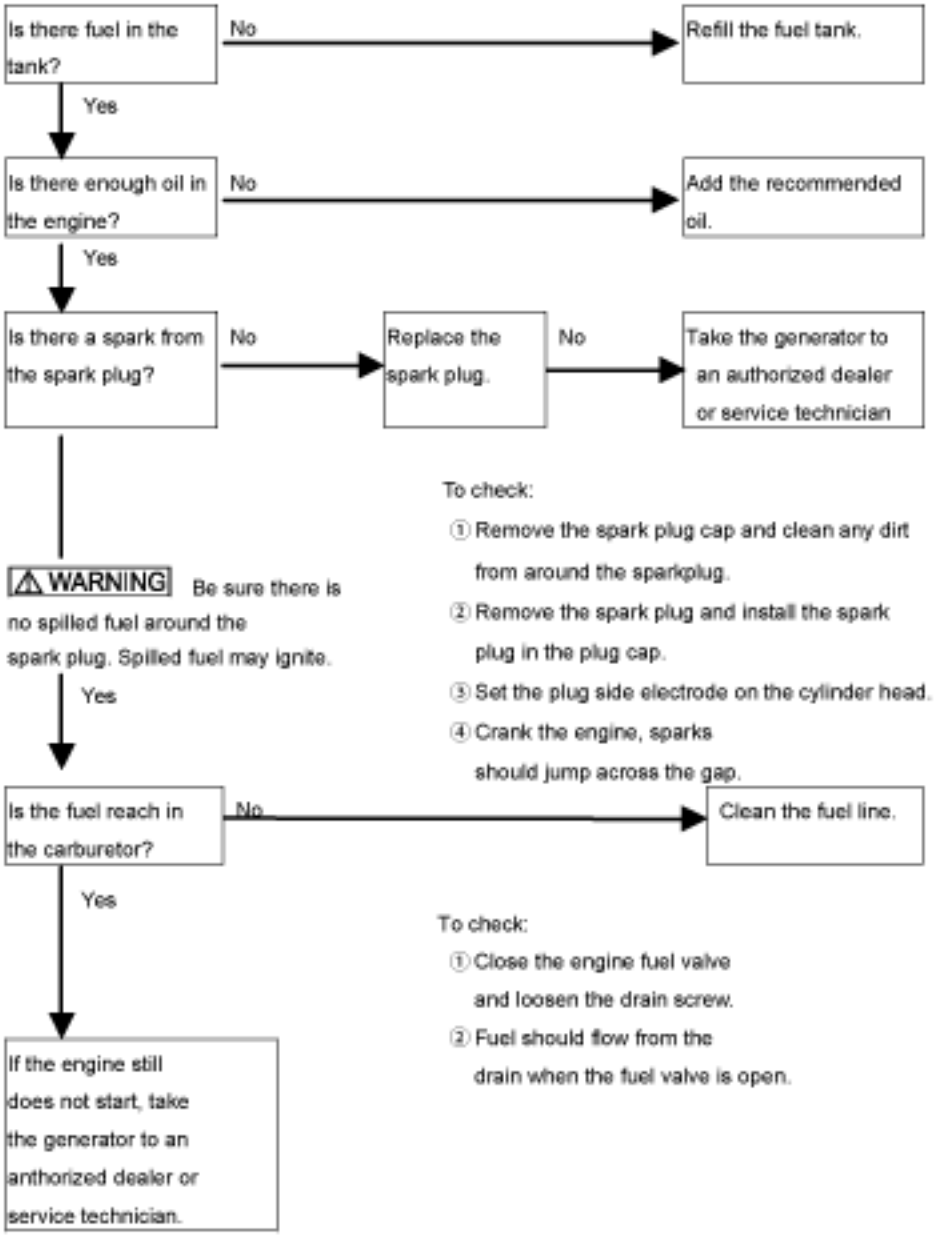

No electricity at the AC receptacles:

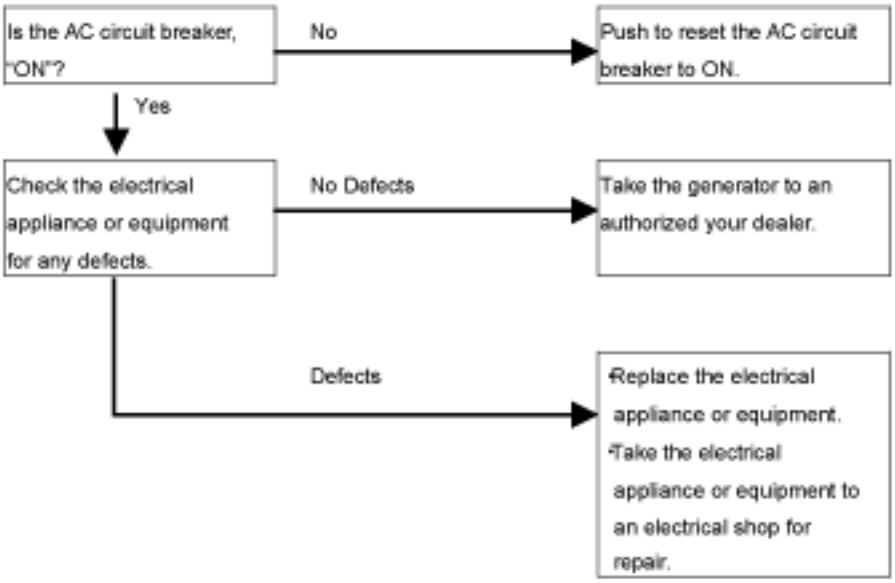

WIRING DIAGRAM

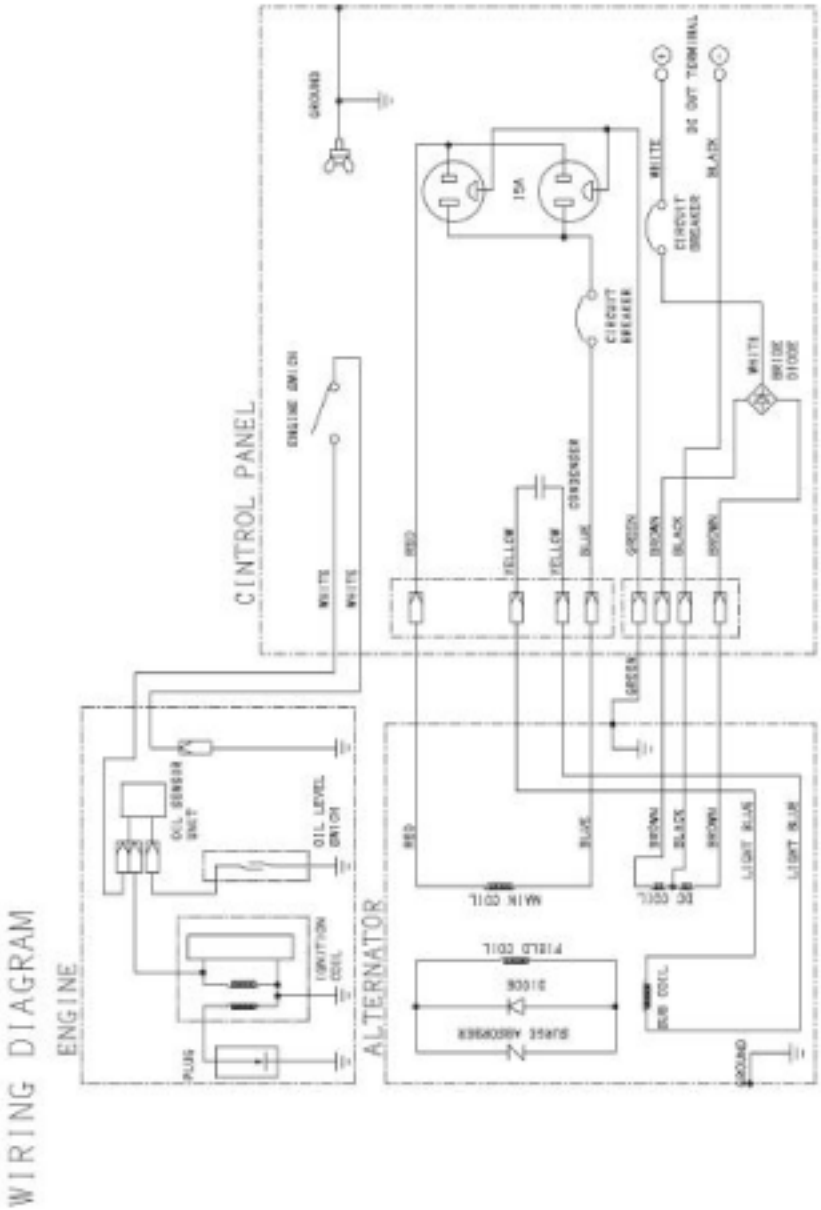

SPECIFICATIONS

Model	#106240
Generator	
AC Frequency	60Hz
AC Output Voltage	120V
Maximum AC Output	1000VA
Rated AC Output	900VA
DC Output	12V-8.3A
Voltage Regulator	Condenser Type
Engine	
Model	GT240
Type	Air-Cooled,4Cycle,OHV
	Gasoline Engine
Displacement	$80cm^3$
Maximum Power Output	1.8kW (2.4HP)/ $4000min^{-1}$
Others	
Fuel Tank Capacity	1.2 gallons
Continuous Operating Hours	6.4hr
Operating Noise Level (at7m)	63dB
Dimensions (L×W×H)	18"×13 11/16"×14 13/16"
Dry Weight	55 lbs.
AC Circuit Breaker	●
DC Circuit Breaker	●
Pilot Lamp	●
Oil Alert System	●